EXAG – Profibus with cable

- **Hollow Shaft Encoder - Ø 78 mm**
- **Hollow Bore: Ø 14 mm, Ø 16 mm and Ø 1 inch**
- **Profibus DPV2 – Functionality**
- **Resolution up to 30 bits**
- **Removable End Cap for on-site modifications**
- **ATEX, IECEx, EAC Ex and Profibus Trade Org. certified**

Electrical Specifications

Code:	Absolute - Binary
Interface:	Profibus - DP DPV2 – Functionality Line Driver according to RS 485; galvanically isolated by opto-couplers
Resolution:	Max. 14 bit (16384) revolutions Max. 16 bit (65536) steps per rev.
Device Addressing:	Adjustable by rotary switches in the connection cap
Transmission Rate:	Max. 12 MBaud
Supply Voltage:	10 to 30 Vdc
Current Consumption:	Max. 115 mA with 10 Vdc Max. 50 mA with 30 Vdc
Power Consumption:	Max. 2.5 watts
Step Frequency LSB:	800 kHz
Accuracy of Division:	+/- ½ LSB (12 bit) +/- 2 LSB (16 bit)
Electrical Lifetime:	> 10^5 hours
Electrical Protection:	Reverse polarity and over-voltage-peak protection
Noise Immunity:	EN61000-6-2
Emitted Interference:	EN 61000-6-4

Mechanical Specifications

Material:	Housing: Aluminum or Stainless Steel Cap: Aluminum or Stainless Steel Hollow Shaft: Stainless Steel
Weight:	Aluminum: ~ 1600 gr (56,44 oz) Stainless Steel: ~ 3100 gr (109,35 oz)
Bearing Life:	> 1,9 x 10^{10} revolutions at rated load
Hollow Shaft Speed:	6.000 rpm (max.) IP 64 3.000 rpm (max.) IP 65/66/67/68
Starting Torque:	≤ 0,01 Nm at 25° C (no seal) ≤ 0,03 Nm at 25° C (with seal)
Rotor Mass Moment of Inertia:	Face Mount B: 595 gcm² Face Mount C: 102 gcm²
Shaft Loads:	Axial: 60 N (13,50 lbs) max. Radial: 80 N (17,98 lbs) max.

Environmental Specifications

Operating Temp.:	-40° to +70° C
Storage Temp.:	-40° to +70° C
Shock:	100g @ 11 ms
Vibration:	10g @ 10-2000 Hz
Bump:	10g @ 16 ms (1000 x 3 axis)
Humidity:	98 % RH without condensation
Enclosure Rating:	IP 64 / Nema 4 (approx.) IP 65 / Nema 5 (approx.) IP 66 / Nema 6 (approx.) IP 67 / Nema 6 (approx.) IP 68 (1hour/1 meter) / Nema 6P (approx.)

Certifications

ATEX:	Certificate No.: ITS09ATEX16867X II 2 G Ex db IIC T5 Gb II 2 D Ex tb IIIC T100°C Db -40°C≤ Ta≤ +70°C
IECEx:	Certificate No.: IECEx ITS 10.0016X Ex db IIC T5 Gb, Ex tb IIIC T100°C Db -40°C≤ Ta≤ +70°C
EAC Ex:	НАНИО «ЦСВЭ» No. ЕАЭС RU C-DK.AA87.B.00266/19 1Ex db IIC T5 Gb X, Ex tb IIIC T100°C Db X -40°C<T.amb<+70°C

Installation

The rotary encoder is connected by one, two or three cables. This depends on whether the power supply is integrated into the bus cable or connected separately. If the power supply is integrated into the bus cable, one of the cable glands can be fitted with a plug. Unused cable entries must be closed using an Ex d -proof blind plug (*see Accessories*). The cable gland options are suitable for Profibus cables ranging from ø 6,5 mm to ø 14,3 mm.

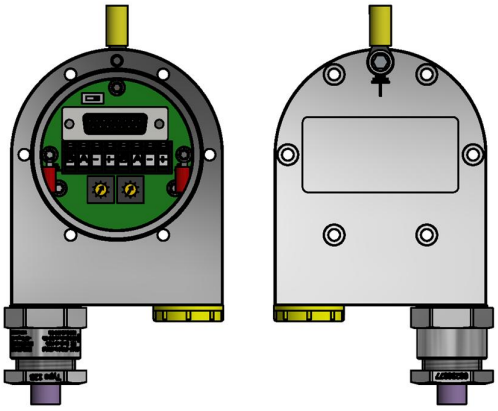

The Profibus-DP device address is set by user-friendly rotary switches in the connection cap. Allowed addresses are between 1 and 99. Each can only be used once.

The connection cap can easily be opened by removing the six screws in the cap.

The Termination Resistor is integrated into the connection cap. It must be switched on if the encoder is connected at the end or the beginning of the bus.

The power supply has to be connected once (no matter which clamps). If the Termination Resistor is switched on, the out-going bus lines are disconnected.

The GSD file is necessary for installing the encoder. The GSD file and the detailed user manual can be downloaded from our homepage: www.scancon.dk

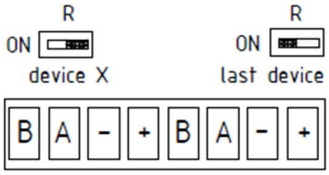

Terminal	Discription
B (left)	Bus line B (Bus in)
A (left)	Bus line A (Bus in)
-	0V (GND)
+	10-30V
B (right)	Bus line B (Bus out)
A (right)	Bus line A (Bus out)
-	0V (GND)
+	10-30V

- **The internal earth connection** (red cable shoes) is 22-16 AWG.
  La connexion à la terre interne (Borne rouge) est en 22-16 AWG.

- **The external earth connection (yellow cable shoe) is 12-10 AWG.**
  La connexion de terre externe (Borne jaune) est en 12-10 AWG.

- **The terminal block** is intended for installation a cable with wire size:
  a) solid 0,14 mm2 – 2,5 mm2.
  b) Stranded 0,14 mm2 - 1,5 mm2
  c) stranded with ferrule 0,25 mm2 - 1,5 mm2.

  The rated wire size is AWG 22-12.

- ***Le bornier** est conçu pour une installation d'un câble à la taille du fil:*
  a) rigide de 0,14 mm2 - 2,5 mm2
  b) souple 0,14 mm2 - 1,5 mm2
  c) souple avec embout 0,25 mm2 - 1,5 mm2.

  La taille de fil nominale est AWG 22-12.
  .

Interface

The Profibus-DP interface supports CLASS 1 and CLASS 2 functionality according to the encoder profile*. In addition to these functions, the GSD file supports further features, for example software limit switches. Furthermore, the following encoder parameters can be programmed directly via the Profibus-DP network without any extra device:

Parameter	Comment
Counting Direction	The counting direction parameter defines whether the output code increases when the shaft rotates clockwise.
Resolution per Revolution	The parameter ”resolution per revolution” is used to program the desired number of steps per revolution. Each value between 1 and the physical resolution per revolution can be programmed
Total Resolution	This parameter is used to program the desired number of measuring units over the total measuring range. This value may not exceed the total physical resolution of the absolute rotary encoder.
Preset Value	The preset value is the desired position value, which should be reached at a certain physical position of the axis. The position value is set to the desired process value by the parameter preset.
Velocity	The implemented software can additionally deliver the current velocity. This value is transmitted in binary code, 16 Bit, in addition to the process value. It is possible to choose between four different units; steps per 10 ms, per 100 ms, per 1000 ms, and revolutions per minute.
Software Limit Switches Function	Two software limit switches can be set. If the position value falls below the lower or exceeds the higher limit switch, a status bit in the process value is set.
Teach-in (Online Parameterization)	A special mode is available for the commissioning phase of the device. This makes it possible to change parameters while the encoder is in data exchange mode. For continuous operation, another mode is available in which the parameters are protected against unintentional changes.

* The Profibus-DP profile for the encoder can be ordered using Order No. 3.062 from:

Profibus Nutzerorganisation e.V.
Haid und Neu-Str. 7
D-76131 Karlsruhe
Germany

Face mounts

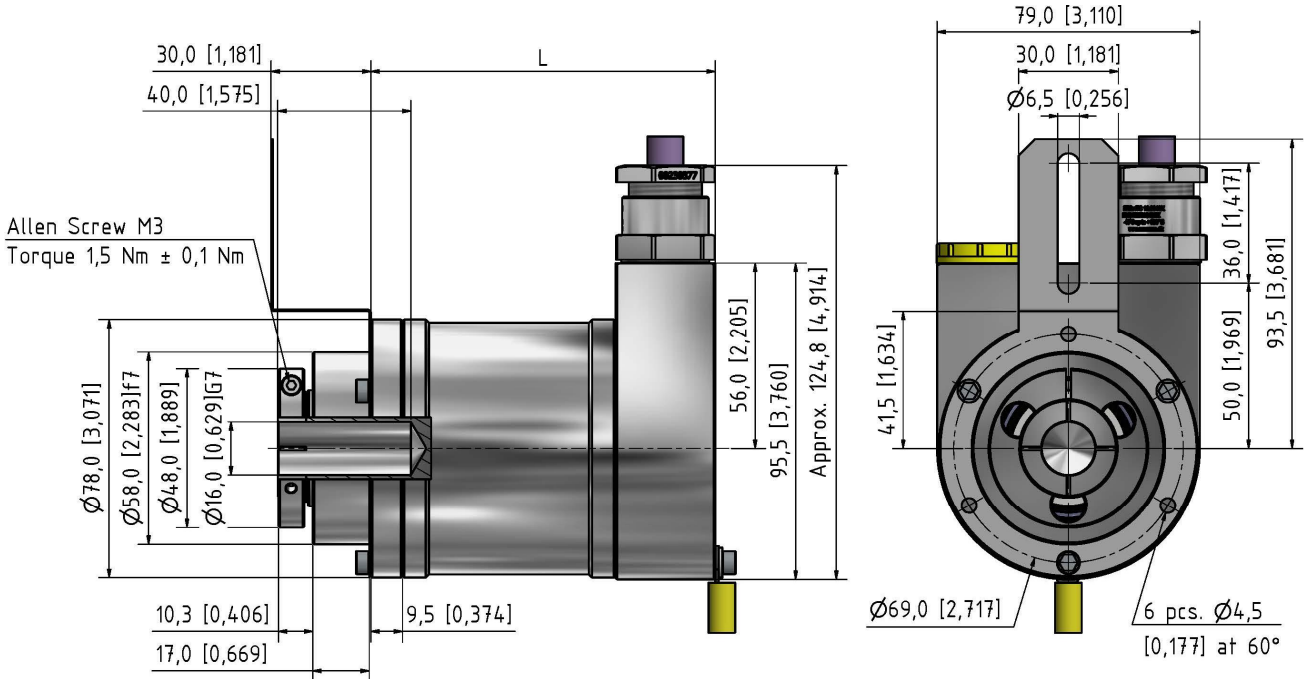

Face Mount B
Clamping Flange

mm (inches)

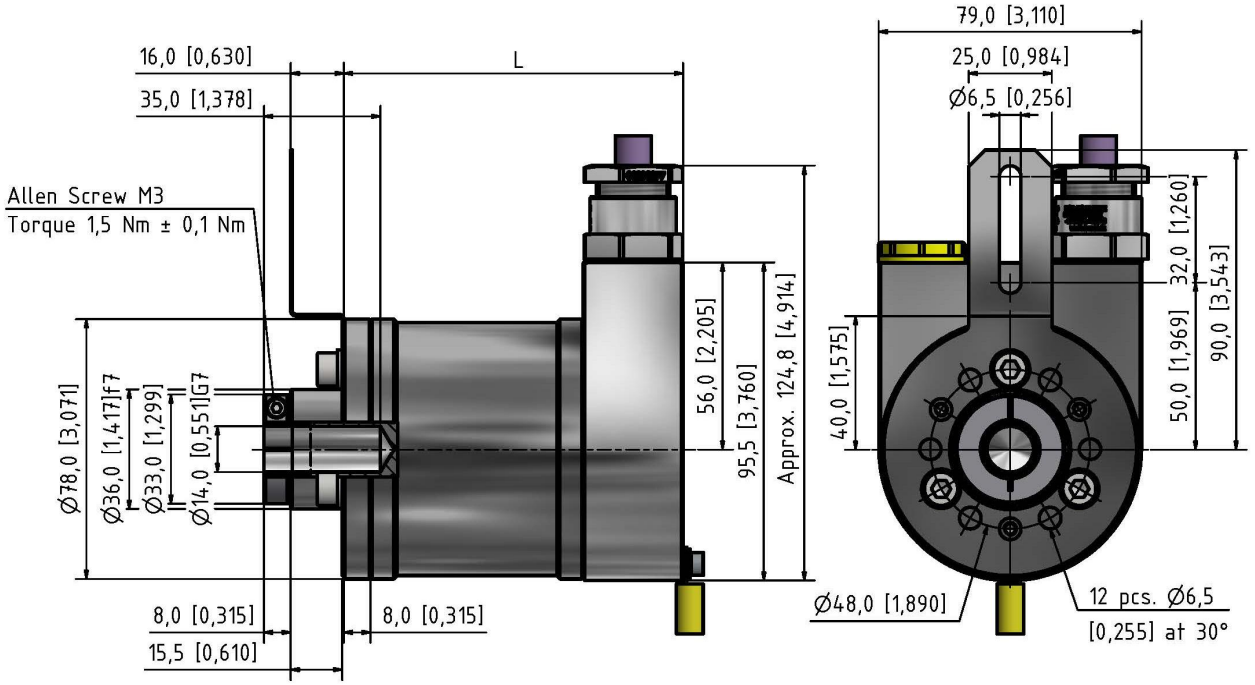

Face Mount C
Clamping Flange

mm (inches)

Cable Outlet

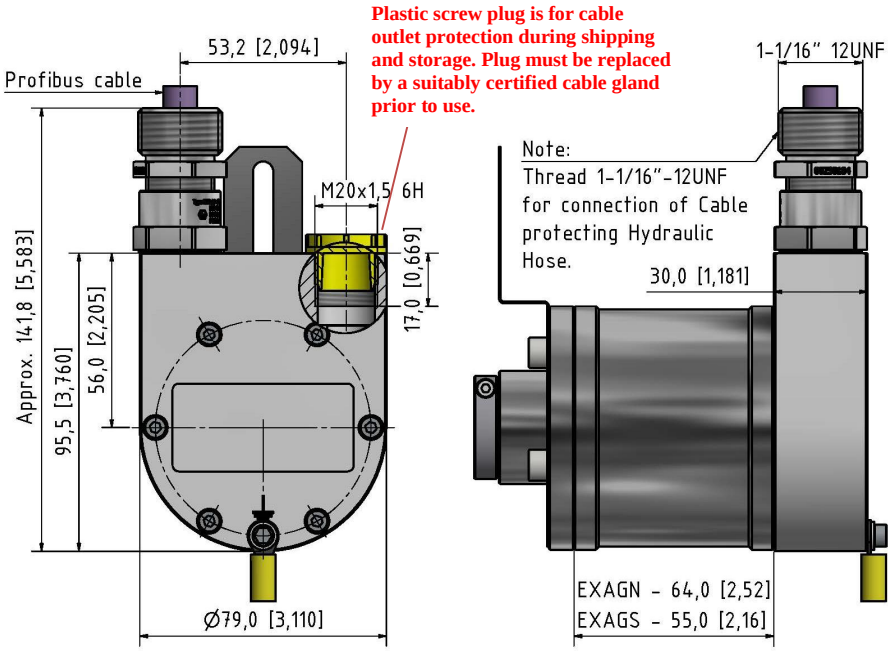

Side Standard End Cap - FPA mm (inches)

EX d certified cable gland included

For use with cable-protecting hose (NBR composite or similar)

See Table 3.

Table 1. Cable Output

Terminal	Description	Wire Color
B (left)	Bus line B (Bus in)	Red
A (left)	Bus line A (Bus in)	Green
-	0V	Blue
+	10-30V	Black
B (right)	N/C	-
A (right)	N/C	-
-	N/C	-
+	N/C	-

1 mm² Black – Blue
0,34 mm² Green - Red

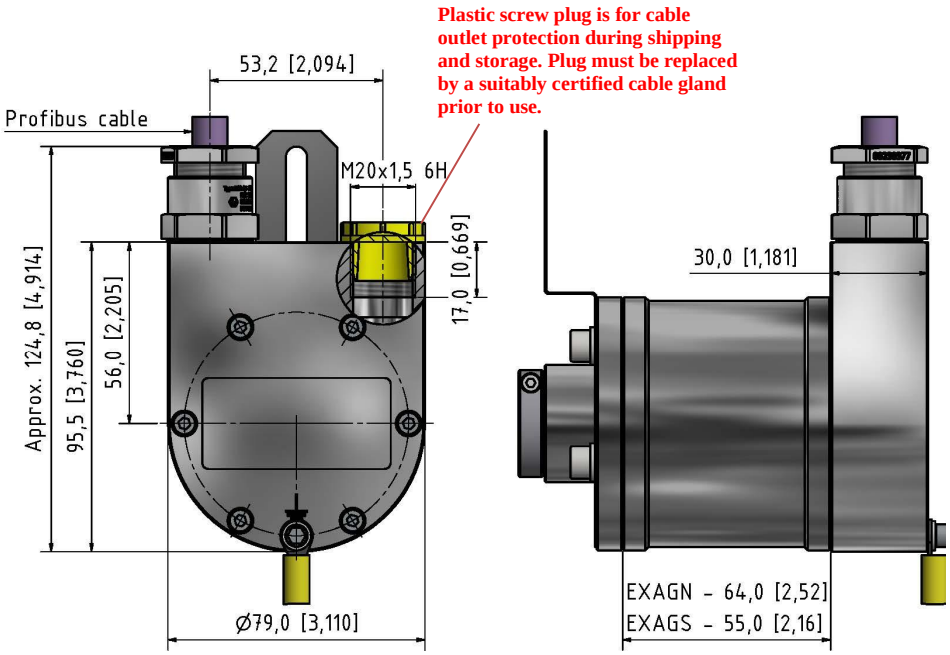

Side Standard End Cap - FPB mm (inches)

EX d certified cable gland included

See Table 3.

Table 2. Cable Output

Terminal	Description	Wire Color
B (left)	Bus line B (Bus in)	Red
A (left)	Bus line A (Bus in)	Green
-	0V	Blue
+	10-30V	Black
B (right)	N/C	-
A (right)	N/C	-
-	N/C	-
+	N/C	-

1 mm² Black – Blue
0,34 mm² Green - Red

Encoder Length

Housing N (Table 3)
(64 mm)

Total Encoder Length

End Cap	Clamping Flange B	Clamping Flange C
FPA	103,5 mm (4,07 in)	102 mm (4,02 in)

End Cap + Face Mount + 64 mm = Total Encoder Length

Housing S (Table 4)
(55 mm)

Total Encoder Length

End Cap	Clamping Flange B	Clamping Flange C
FPB	94,5 mm (3,72 in)	93 mm (3,66 in)

End Cap + Face Mount + 55 mm = Total Encoder Length

Ordering Code

Example: **EXAGN-DPC1B-12-12-H-AL-01-66-15-FPA-C-S1**

EXAG		-	DPC1	B	-		-		-	H	-		-		-		-		-		-	
	1			2		3		4				5		6		7		8		9		10		11

1. Housing

64 mm length ..... **N**
55 mm length …….. **S**

See Table 1 & 2

2. Interface

Vers. ……..... **DPC1/**
Code …….. Binary **B**

3. Revolution

Single Turn..... **00**
Multiturn 12 bits (4096) **12**
Multiturn 14 bits (16384..... **14**

4. Steps per revolution

12 bits (4096) (0.09^0).....**12**
13 bits (8192) (0.04^0).....**13**
16 bits (65536) (0.005^0)....**16**

5. Composition

Aluminum ….....…… **AL**
Stainless Steel* ..... **VA**
Stainless Steel** ..... **SA**

** AISI 303*
*** AISI 316*

6. Hollow Shaft ***(diameter)***

14 mm ……..... **01**
16 mm *Face Mount B only*……. **02**
14 mm *Face mount B* …..……...**03**
1 inch *Face mount B only*……**04**

7. IP Rating

IP 64 ……..……...…… **64**
IP 65 ……..……..... **65**
IP 66 ……..…… **66**
IP 67 ……..…… **67**
IP 68* ……...…… **68**

*1 meter/1 hour

8. Cable

Specify length ……..... **XX**

9. Cable Outlets

Side Standard……..…….. **FPA**
Side Standard …….. **FPB**

10. Face mount

Clamping flange ……. **B**
Clamping flange ……..... **C**

11. Accessory

Spring Coupling
1 hole *Flange C p/n 80131046*…**S1**
1 hole *FlangeB p/n 80131342*....**S2**