Flange for SCH16F

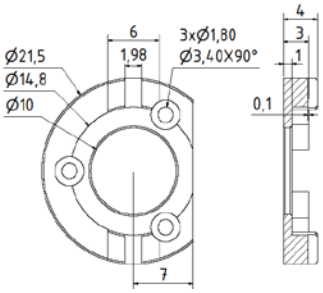

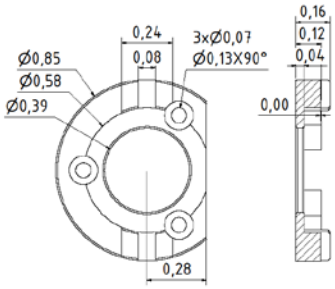

For Maxon EC-max22

mm

Part No. 80131366

Material: Aluminium

inches

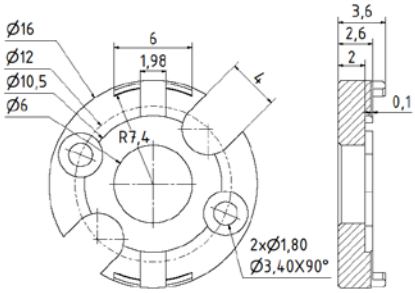

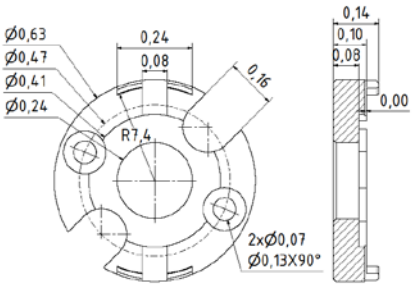

For Maxon RE-max17

mm

Part No. 80131298

Material: Aluminium

inches

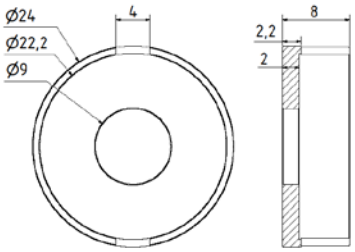

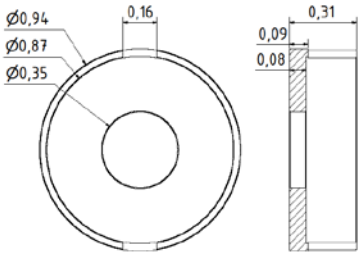

For Maxon Amax22, MDP/Essilor

mm

Part No. 80130981

Material: Aluminium

inches

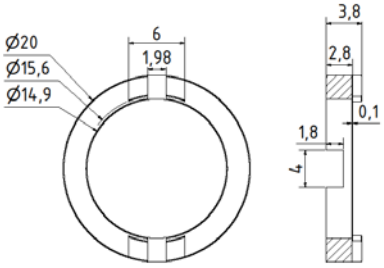

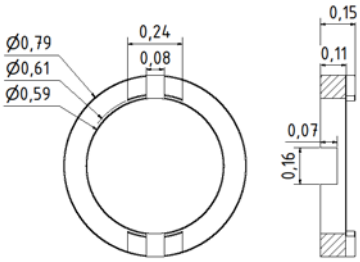

For Minimotor 2224

mm

Part No. 80130662

Material: Aluminium

inches

Flange for SCH16F

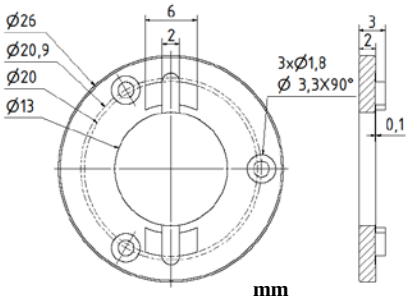

mm

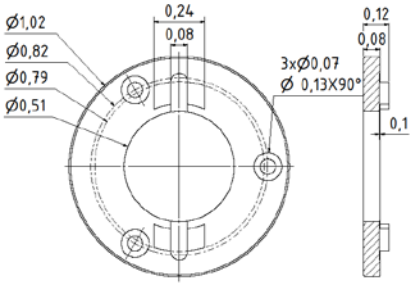

inches

For Maxon EC32, Litton SAM

Part No. 80139287

Material: Aluminium

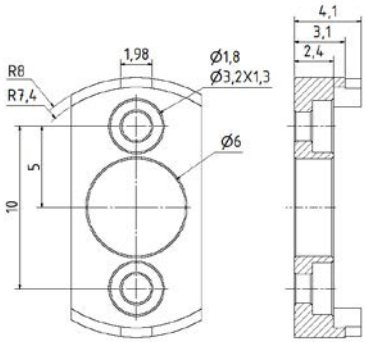

mm

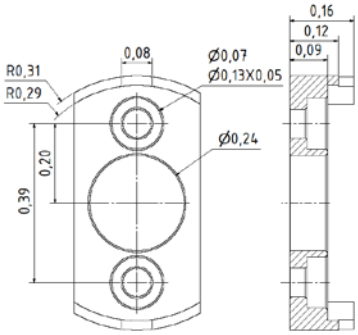

inches

For Porte scap

Part No. 80131999

Material: Aluminium

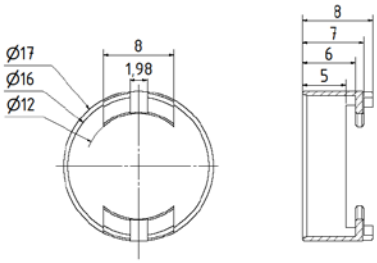

mm

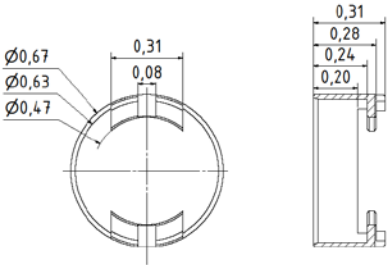

inches

For Faulhaber 1624E MINI SA
CH-6980 croglio

Part No. 80138060

Material: Aluminium

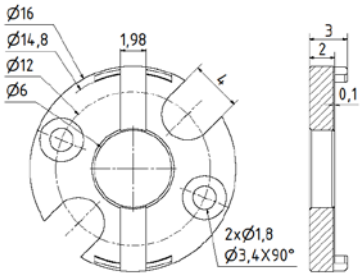

mm

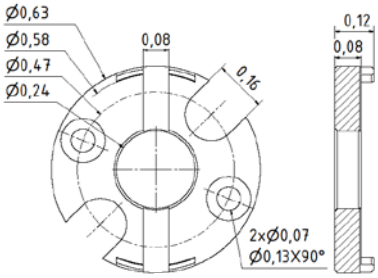

inches

For Maxon Amax16

Part No. 80139106

Material: Aluminium

Flange for SCH16F

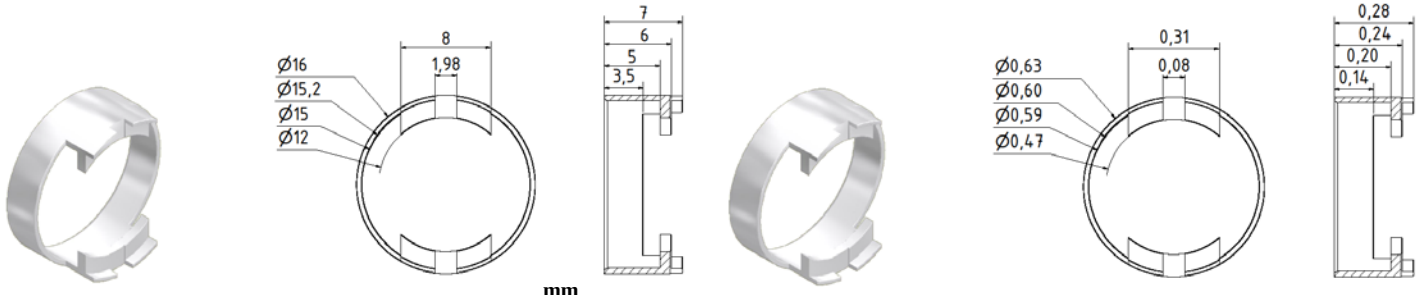

mm

inches

Part No. 80130968

Material: Aluminium

For Minimotor 1516

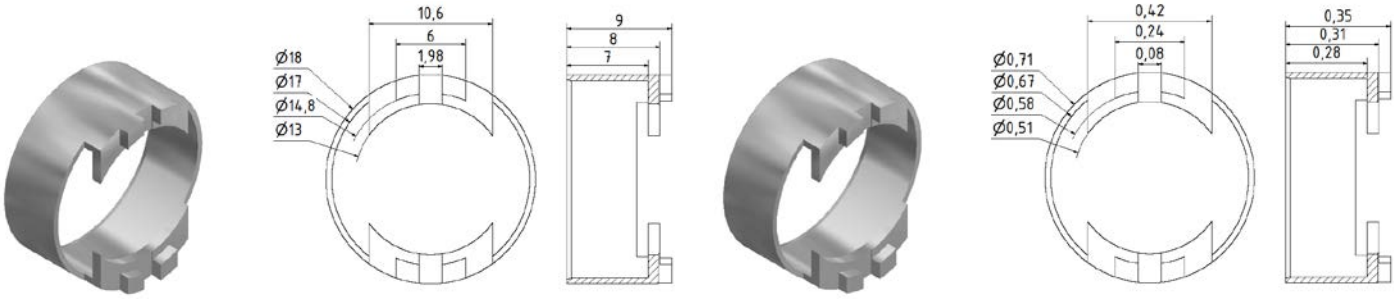

mm

inches

Part No. 80130391

Material: Aluminium

For Minimotor 5581

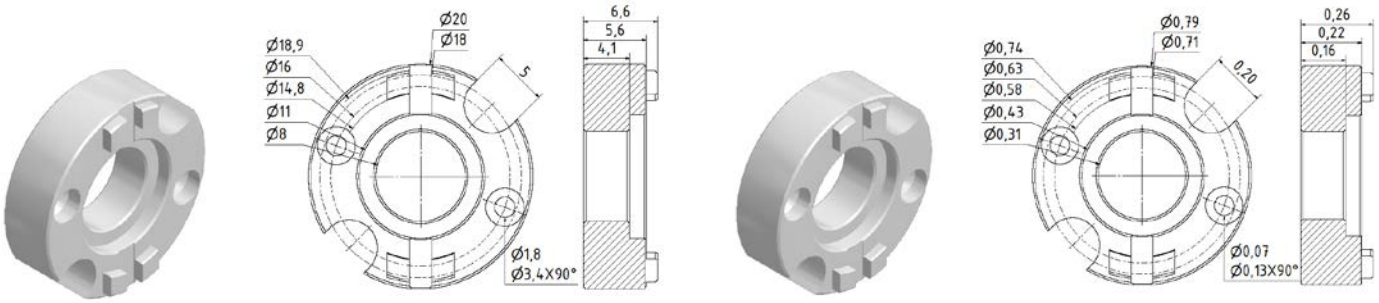

mm

inches

Part No. 80139835

Material: Aluminium

For Maxon Amax 22/26/29,
F2130,F2190, S2322, REmax29, RE025

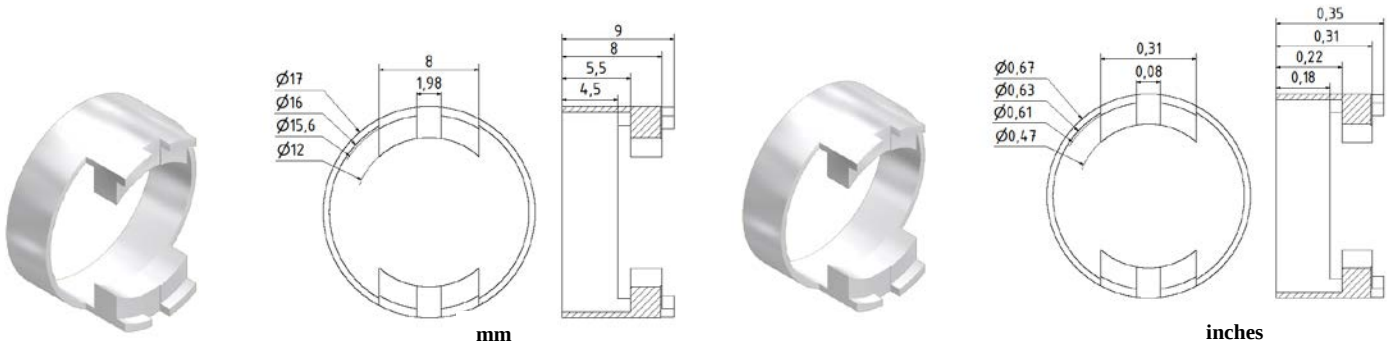

mm

inches

Part No. 80130569

Material: Aluminium

For Minimotor 1727

Flange for SCH16F

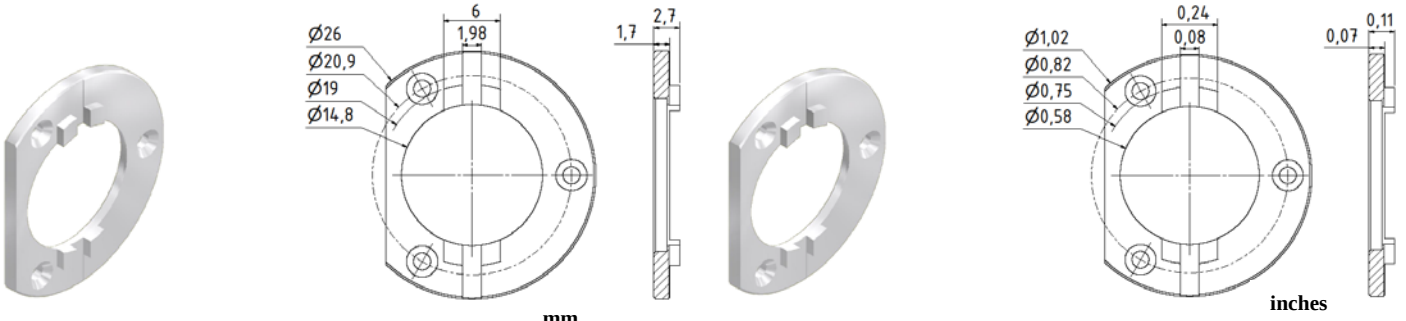

For Maxon ECmax30

Part No. 80131683

Material: Aluminium

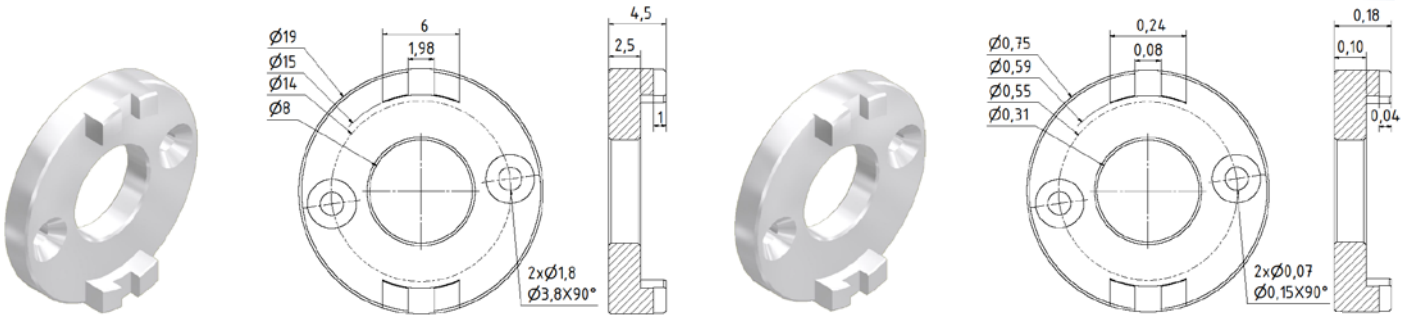

For Maxon REmax19/21

Part No. 80131741

Material: Aluminium

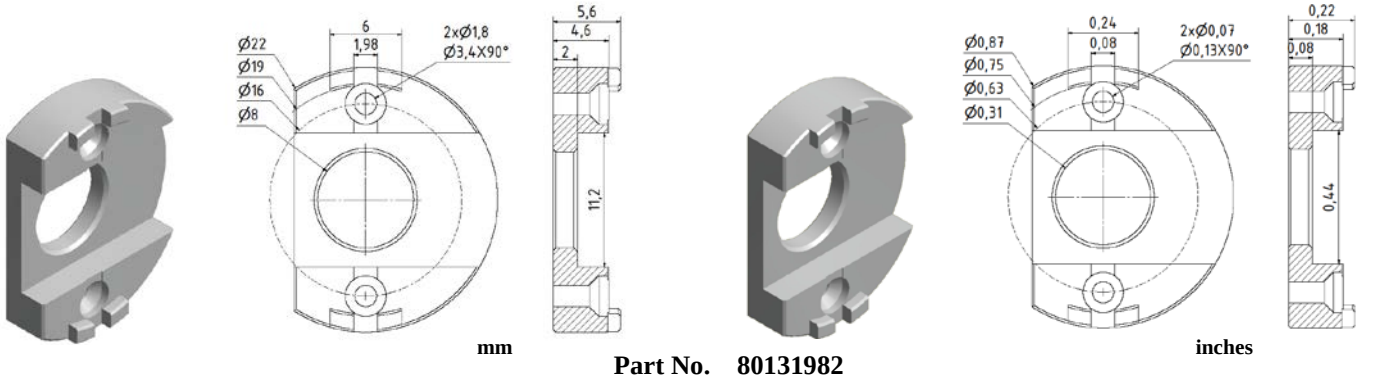

For Maxon EC22

Part No. 80131982

Material: Aluminium

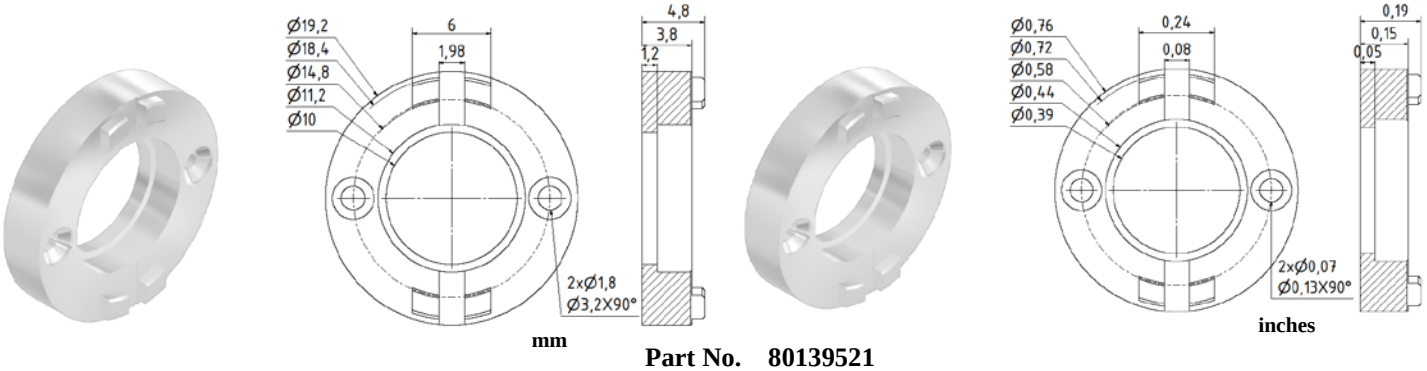

For Maxon S2326

Part No. 80139521

Material: Aluminium

Flange for SCH16F

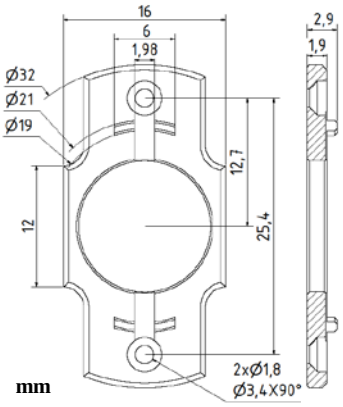

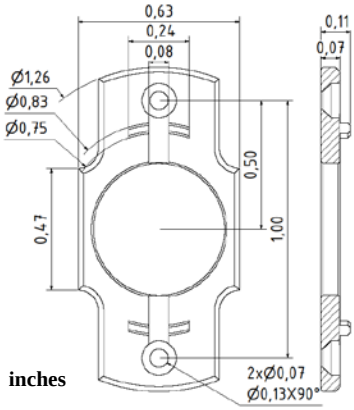

For Maxon 2332/966

Part No. 80139418

Material: Aluminium

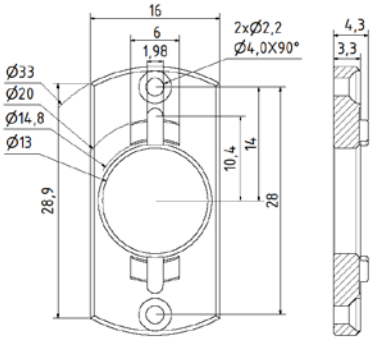

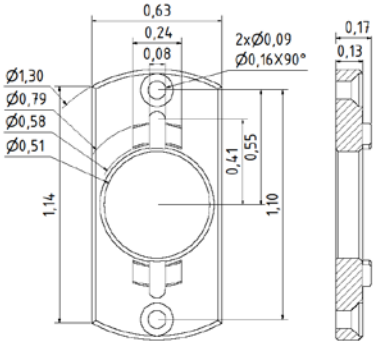

For Maxon RE035

Part No. 80139230

Material: Aluminium

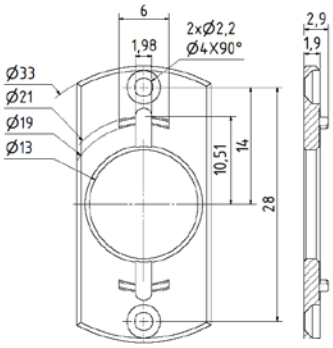

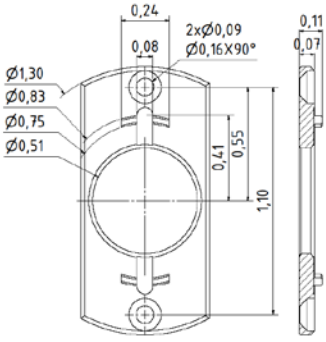

For Maxon RE035

Part No. 80139272

Material: Aluminium

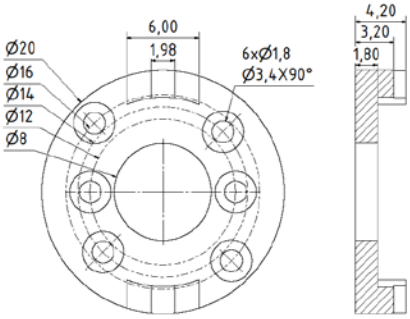

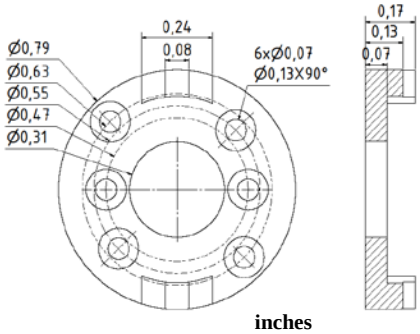

For Maxon REmax 17/21/24/29
Amax 16/19/22/26

Part No. 80139857

Material: Aluminium

Flange for SCH16F

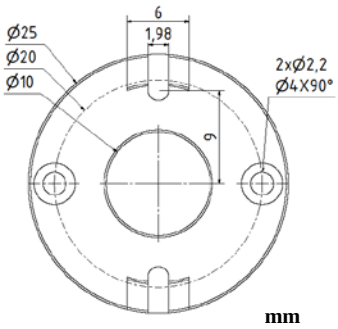

mm

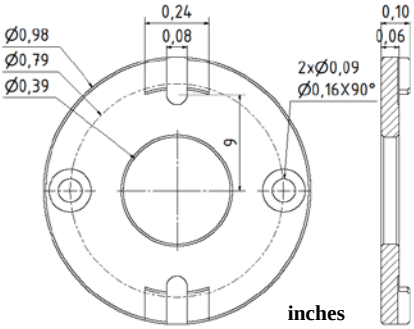

inches

For Minimotor 2842S

Part No. 80139700

Material: Aluminium

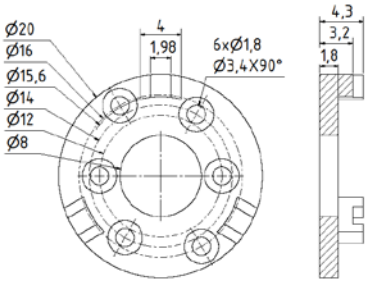

mm

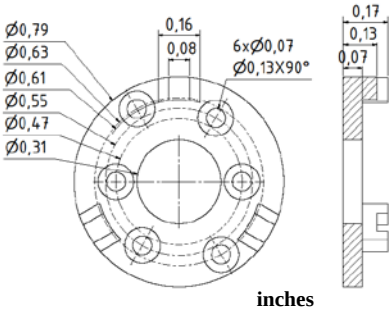

inches

For Maxon REmax 19/21/24/29
Amax 16/19/22/26

Part No. 80130017

Material: Aluminium

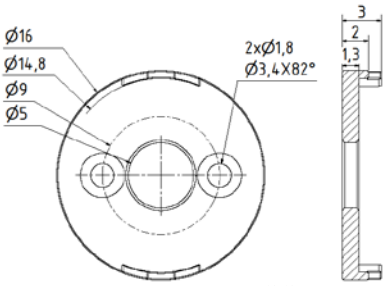

mm

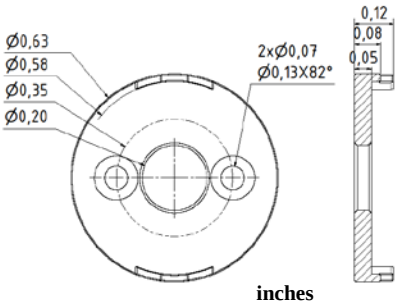

inches

For Maxon RE13/16

Part No. 80130079

Material: Aluminium

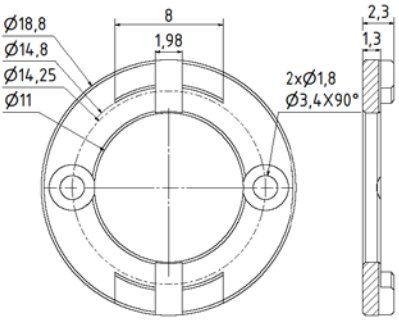

mm

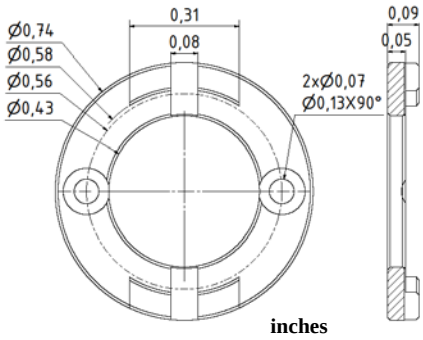

inches

For Micromotor Ø19

Part No. 80138066

Material: Aluminium

Flange for SCH16F

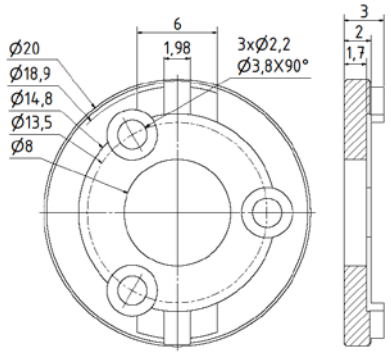

mm

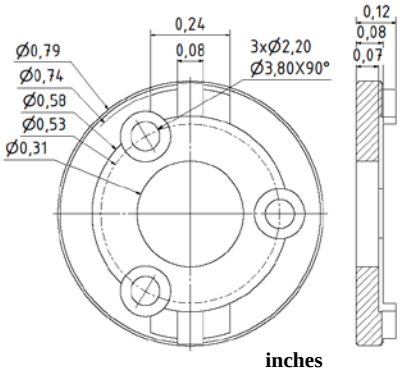

inches

For Maxon EC20BL

Part No. 80139430

Material: Aluminium

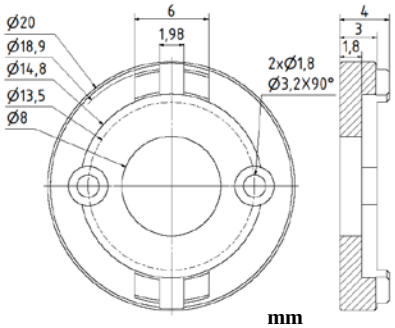

mm

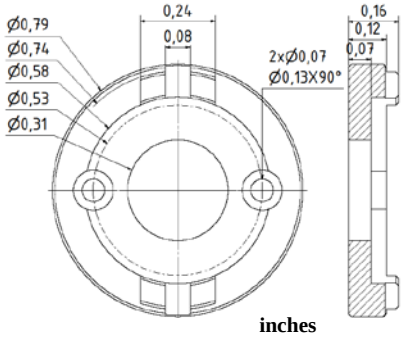

inches

For Maxon EC22 BLY

Part No. 80139504

Material: Aluminium

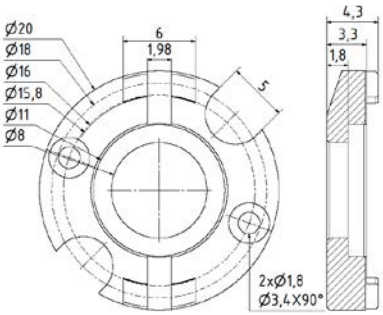

mm

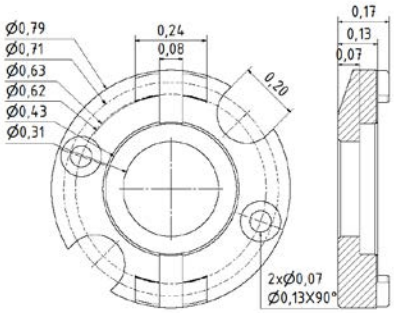

inches

For Maxon RE02, F2130,F2140, S2322, Amax22/26, REmax21/24

Part No. 80139055

Material: Aluminium

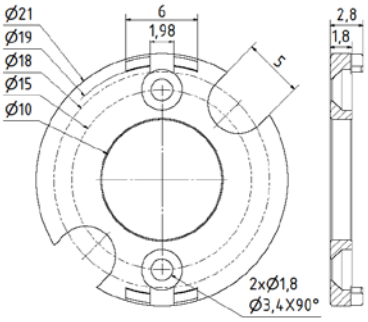

mm

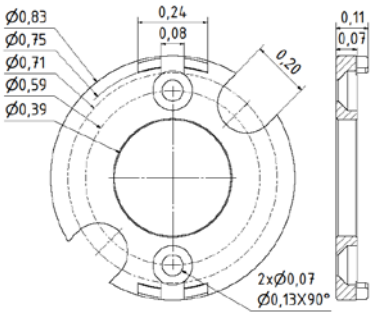

inches

For Maxon Ø26

Part No. 80139364

Material: Aluminium